VACRON
ADVANCES IN SECURITY SOLUTIONS

NEW

ONVIF

4 Megapixel Vandal Dome

IP Camera

IP Surveillance

VIG-DME55
VIG-DME55V

NEW 2015 SEP. V1.0

- 4 Mega Pixel 1/3" CMOS Image Sensor.
- Real-time H.264, MJPEG Compression(Dual Codec).
- Resolution : 2688x1520.
- Simultaneous Multiple Streams.
- 24 IR LEDs, IR Range 15M.
- Supports ONVIF Standard to Simplify Integration and Enhance Interoperability.

VIG-DME55
VIG-DME55V

4 Megapixel Vandal Dome
IP Camera

4 MEGA PIXEL | 1/3" CMOS | CS mount (VIG-DME55) | LENS 2.8~12mm (VIG-DME55V) | 24 LEDs | 15 M | IRCut | H.264 | P.O.E optional

Dimension Unit: mm

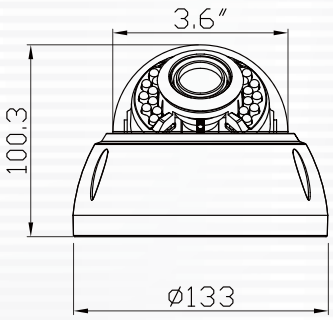

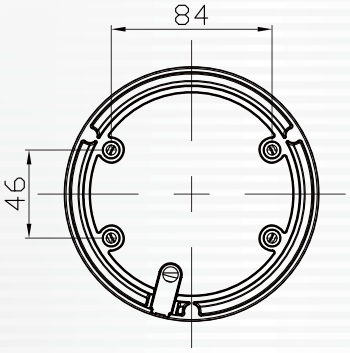

SPECIFICATIONS

Model		VIG-DME55	VIG-DME55V
System		Flash：16MB	
		RAM：256MB	
Image Sensor		4 Megapixel High Quality 1/3" CMOS Image Sensor	
Sensitivity		0 Lux (IR ON)	
IR LEDs		24 pcs	
IR Range		15 M	
Lens		Megapixel CS mount	Varifocal 2.8-12mm F1.4
		Removable IR-cut filter for day & night function	
Video		H.264: 2688x1520 at 12fps	
		H.264: 1920x1080 at 25 fps	
		H.264: 1600x1200 at 25 fps	
		H.264: 1280x720 at 30 fps	
		H.264: 640x480 at 30 fps	
		Compression: H.264, MJPEG Streaming: Dual Codec (H.264、JPEG) Selectable	
		Support Simultaneous multiple streams	
Image Settings		Adjustable image size, quality, and bit rate	
		Time/Date stamp and text caption overlay.	
		BNC connector for video output, NTSC/PAL video output switch	
		Adjustable image size, quality, and bit rate	
		Time/Date stamp and text caption overlay.	
		Configurable brightness, contrast, saturation, sharpness, white balance and exposure	
		AGC / AWB / AES	
Networking	Interface	10/100 Mbps Ethernet, RJ-45	
	Supported Protocol	IPv4,TCP/IP,DHCP,HTTP,RTSP,SNTP,DNS	
	Supported Browser	Microsoft Internet Explorer 6.0 or above	
Alarm and Event		Motion Detection	
Managemnent		Event notification using SMTP or FTP	
Users		8 clients on-line monitoring at the same time	
		Multi-level user access control with password protection	
Maintenance		Supports online firmware upgrade	
I/O		RJ-45 Ethernet x 1,DC Jack x1	
Power		DC12V or PoE IEEE802.3af Class 0 (optional)	
Max. Power Consumption		3.6W(IR OFF),7W(IR ON)	
Weight		Netweight: 1050 g	
Dimension		W:Φ135mm H:110mm	
Operating Environments		Temperature: 0 ~ 45 °C Humidity: 90%	

★Product specifications are subject to change without notice; please contact us for the latest information.

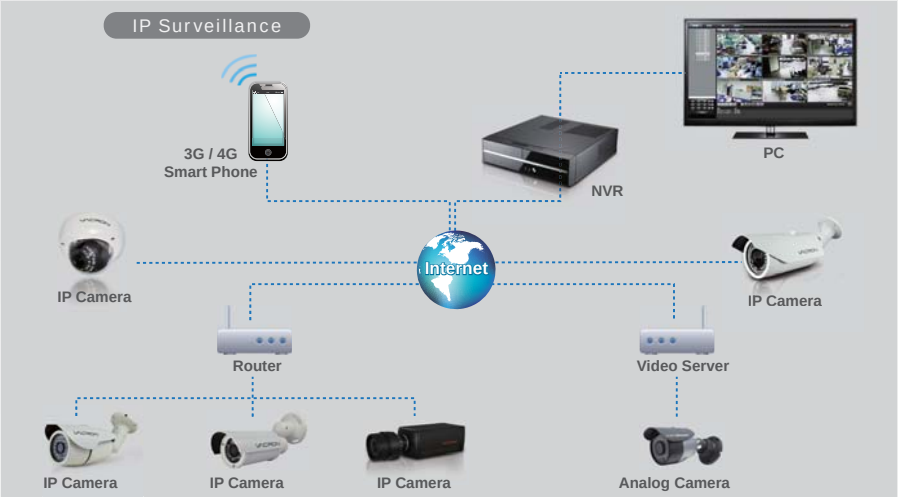

■ DISTRIBUTED BY

VACRON ADVANCES IN SECURITY SOLUTIONS
FUHO TECHNOLOGY CO., LTD.
Head Office: No. 30, Lane 726, Jinma Rd, Sec. 3, Chang Hua City,Taiwan 500. TEL:886-4-751-2881 FAX:886-4-751-5860
www.vacron.com