VACRON
ADVANCES IN SECURITY SOLUTIONS

HD CCTV 1080P IR Dome Camera

CCTV Surveillance

NEW 2017 OCT V1.0

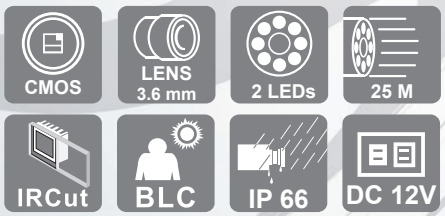

HAD-5927D

- 1/2.9" CMOS Sensor with 1080P video output
- Low light sensitivity of 0.1 Lux / F1.8, 0Lux (IR LED ON)
- DWDR to increase image recognizability in overexposure and dark areas
- Day and night 24-hour surveillance with IR effective distance up to 25 meters
- IP66 for weather-proof application
- Camera parameters adjustable

HD CCTV 1080P IR Dome Camera

HAD-5927D

· SPECIFICATIONS

Pick-up Element	1/ 2.9” SONY CMOS image sensor
Number of Pixels	1985(H) x 1100(V)
Video Frame Rate	1080P@30fps / 1080P@25fps
Min. Illumination	0.1 Lux / F1.8, 0 Lux (IR LED ON)
S/N Ratio	More than 48dB (AGC OFF)
Shutter Speed	1/30 (1/25) sec ~ 1/50000 sec
Lens	f3.6mm / F1.8
Lens Angle	89° (Horizontal) / 46° (Vertical) / 108° (Diagonal)
IR LED	2 units
IR Effective Distance	Up to 25 meters
IR Shift	YES
Day & Night Mode	YES
IRIS Mode	AES
White Balance	AUTO / INDOOR / OUTDOOR / MANUAL
AGC	Adjustable
Sharpness	Adjustable
DWDR	YES
Noise Reduction	YES
IP Rating	IP66
Operating Temperature	-20°C ~ 40°C
Operating Humidity	90% or less relative humidity
Power Source (±10%)	DC12V / 0.5A
Current Consumption (±10%)	90mA (IR LED OFF) / 250mA (IR LED ON)
Net Weight (g)	0.32

★Version updating is not going to inform, please check the on-going updating information

· DIMENSIONS *Dimensional Tolerance: ± 5mm

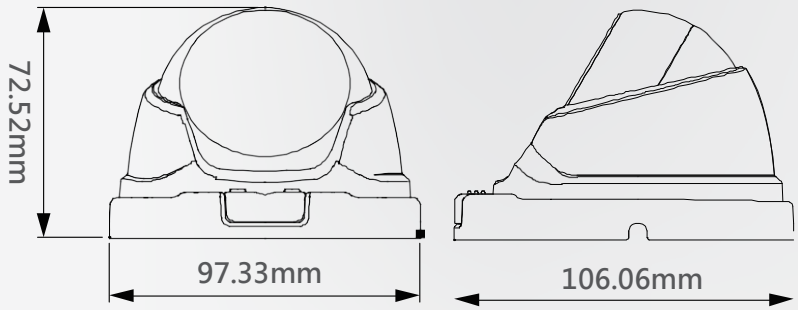

VACRON
ADVANCES IN SECURITY SOLUTIONS
FUHO TECHNOLOGY CO., LTD.
Head Office: No. 30, Lane 726, Jinma Rd, Sec. 3, Chang Hua City,Taiwan 500. TEL:886-4-751-2881 FAX:886-4-751-5860
www.vacron.com